PALLMANN

TOP PERFORMANCE IN SIZE REDUCTION

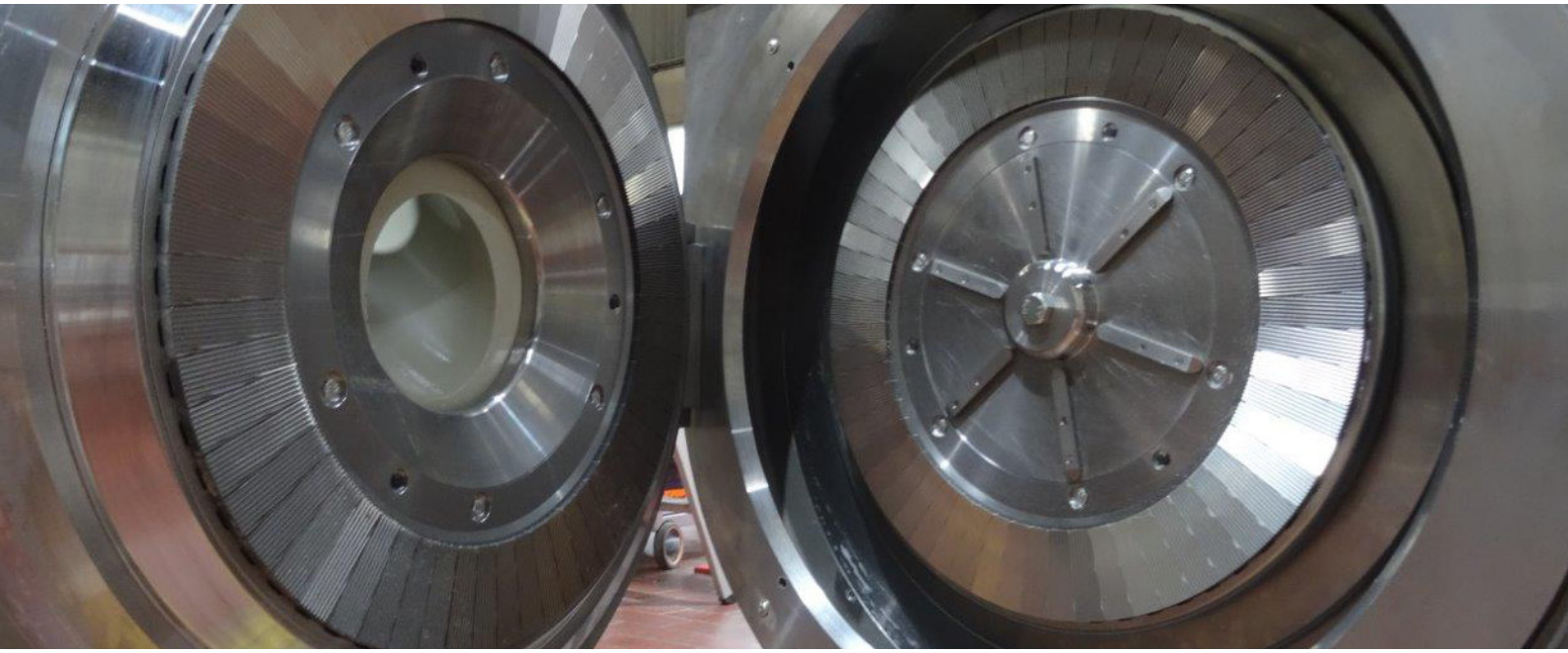

PKMD 600 Disc Mill

Trendsetting Pulverizer with unique grinding zone

PALLMANN PolyGrinder® type PKM-D

Our new PolyGrinder PKMD, for the production of top quality powders

Is now available in well-known and proven PALLMANN quality, with TOP performance and unique versatility.

The powder quality you need for your application in addition to the performance and quality of a pulverizer that sets the standard.

The new PKMD produces powders under ambient conditions for some materials that normally require cryogenic-grinding.

Experience the difference of PALLMANN powder

Advantages for you

- Improved housing design for better performance and temperature sensitive processing
- Material adjusted machine speed even for sophisticated materials
- Compact machine design with direct drive
- Fast and easy gap setting from the outside
- New housing design for optimized accessibility, grinding conditions and material distribution
- Reliable powder quality

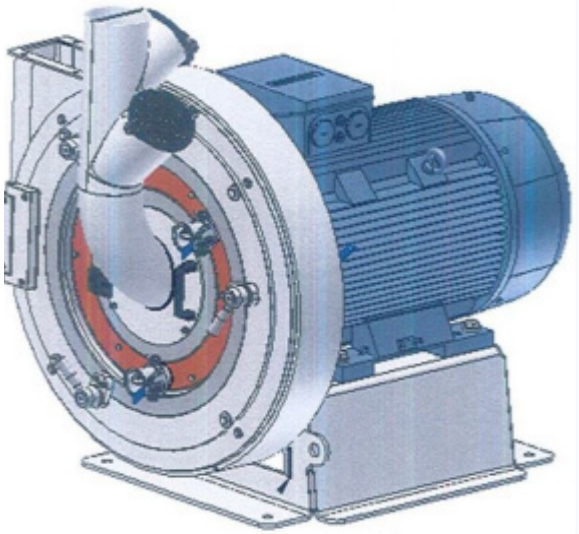

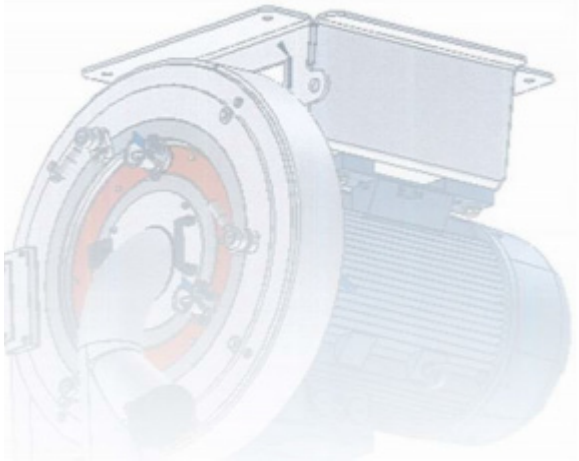

Type		PKMD 600
Grinding chamber diameter	mm	600
Drive, main motor	kW	55
Throughput rate	kg/h	150 - 1000
Dimensions (Installation)	Length mm	2855
	Depth mm	2900
	Height mm	5530

* Throughput rate heavily depends on feed material and desired particle size

PALLMANN

TOP PERFORMANCE IN SIZE REDUCTION

System solutions for:

- Pulverizing
- Granulating
- Agglomerating
- In-House Recycling

Engineering and Service:

- Design and Manufacturing
- Research and development
- Control Systems
- Process monitoring
- Spare and wear parts for size reduction machines in PALLMANN quality
- Installation, commissioning, start - up
- Maintenance and repair service
- Operator training
- Technological training
- Retrofit and modernisation
- Warehouse stocking programs and logistic concepts

ORIGINAL·PALLMANN

PROVEN QUALITY

PALLMANN Maschinenfabrik GmbH & Co. KG
Wolfslochstr. 51
66482 Zweibrücken
Germany
Phone +49 6332 802 0
Fax +49 6332 802 521
E-Mail: plastics@pallmann.eu
www.pallmann.eu

PALLMANN

PALLMANN is the leading manufacturer of size reduction machines and systems for the plastic and in-house recycling industry. PALLMANN Maschinenfabrik designs, manufactures and supplies tailor-made, individual or complete solutions for the processing of almost any plastic as well as in-house recycling products. At its headquarters in Zweibrücken, PALLMANN company operates the world's largest research and development center for size reduction technology as well as a training and service center. More than 100 test machines are available for the preparation of various raw materials including subsequent laboratory analysis on individual scale. In co-operation with the Siempelkamp group, PALLMANN has worldwide production facilities. Our global presence is ensured by a co-ordinated sales network for machinery as well as spare parts and after-sales service.

> Member of Siempelkamp Group

Technical changes reserved. Photos and data are not binding.

K_PKMD 600_10.19